moduline

item # .....

model # .....

project # .....

sis # .....

aia # .....

COOK&HOLD
CSD313E

Static low-temperatures cook&hold drawers with separate controls

CONSTRUCTION FEATURES

- Tightness chamber with radiused corners
- Total thermic insulation with rock wool
- Long lasting drawers seals made up of food grade of high heat resistance
- Static heating provided by low consumption wire heating element that coils up all the chamber
- Ergonomic and fully built-in drawers handle with magnetic closure

FUNCTIONAL FEATURES

- Three electronic controls of the time, temperature and core probe
- Operating temperature 30° ÷ 120°C
- Humidity vents
- Chamber with safety thermostat
- Manual keyboard lock

STANDARD SUPPLY

- Removable GN1/1 tray racks
- Internal core probe
- On feet

OPTIONS & ACCESSORIES

- ☐ Set wheels
- ☐ Grids
- ☐ Trays
- ☐ Black colour
- ☐ Built-in frame

MODULINESRL

Via dell'Industria 11, Z.I. San Giacomo di Veglia 31029 Vittorio Veneto (TV) - ITALY
tel. +39 0438 5063 - fax +39 0438 912 323 - info@moduline.it - www.moduline.it

moduline

TECHNICAL INSTALLATION DIAGRAM

Electricity supply cable inlet

Humidity exhaustion vent

Important - Drawing and dimensions refer to the standard version. They may change with the addition of accessories or options.

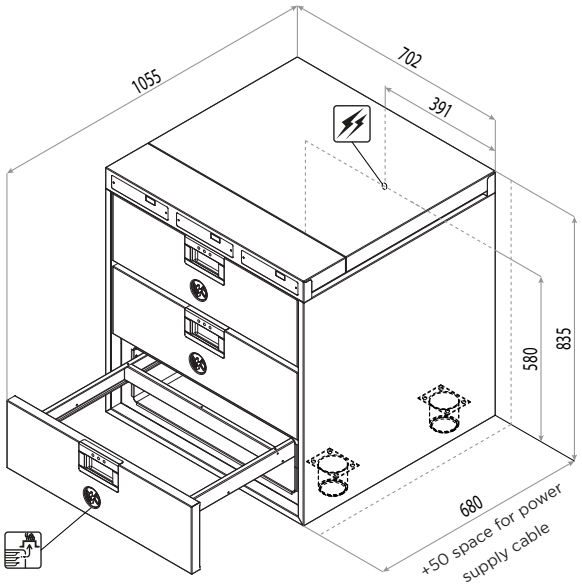

Overall dimensions (W x D x H) - mm	705 x 680 x 835h	**Trays capacity**	3 GN 1/1
Power supply	AC 220-240V 50/60Hz	**Containers max height [mm]**	150
Total input [kW]	2,1 (230V)	**Product max capacity [Kg]**	18
Amps. [A]	9,2 (230V)	**Net weight [Kg]**	100
Working temperature [°C]	30 ÷ 120		

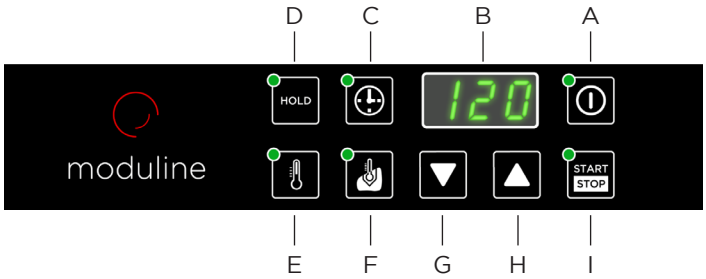

A ON/OFF switch
B Display
C Time selection key
D Keeping warm or regenerating mode programming keys
E Temperature selection key
F Core probe on/off key
G Temperature decrease key
H Temperature increase key
I START/STOP key

MODULINESRL
Via dell'Industria 11, Z.I. San Giacomo di Veglia 31029 Vittorio Veneto (TV) - ITALY
tel. +39 0438 5063 - fax +39 0438 912 323 - info@moduline.it - www.moduline.it